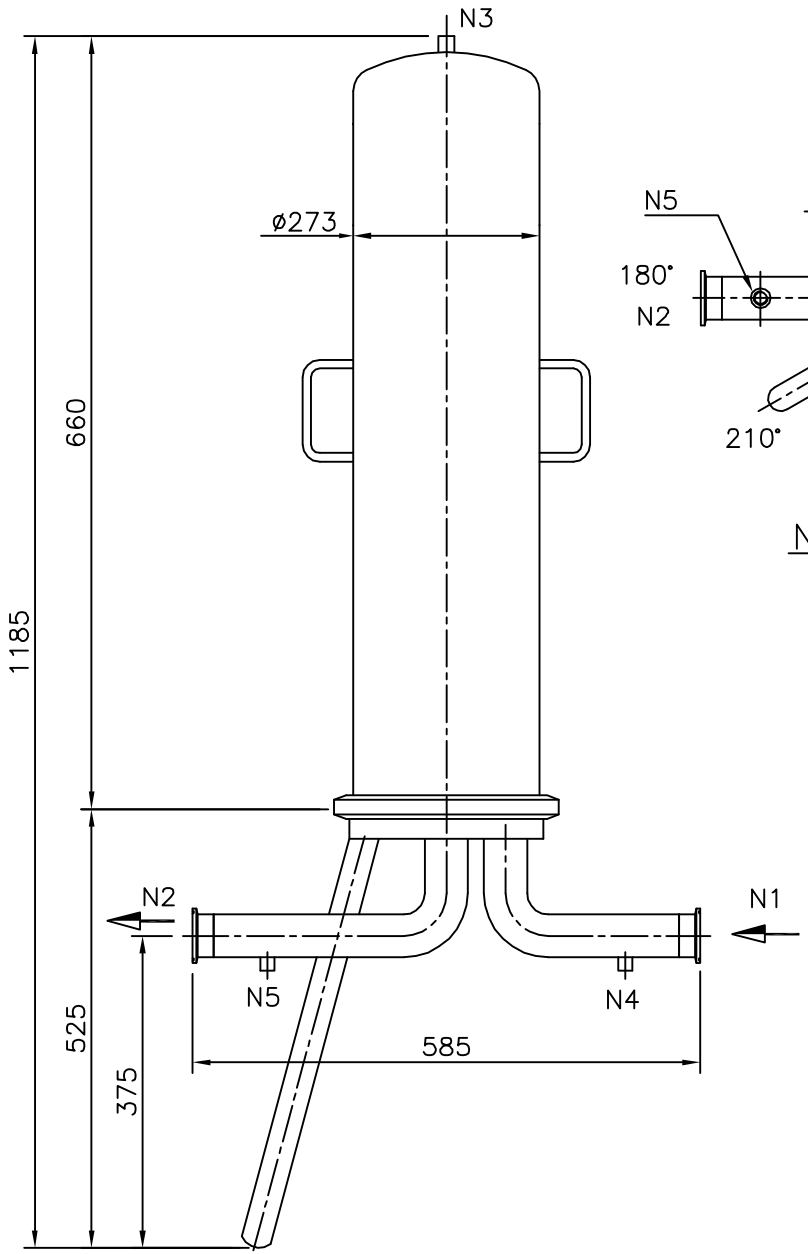

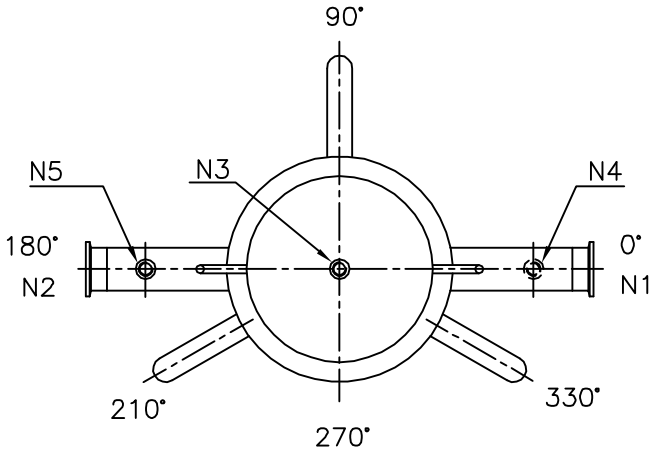

NOZZLE ORIENTATION

1) MAX.OPER.PR. 5Kg./CM^2
2) HYDRO TEST PR. 8Kg./CM^2
3) MAX.OPER.TEMP. 40°C
4) SEAL MATERIAL SILICON
5) SURFACE FINISH MIRROR POLISH INSIDE & OUTSIDE

– ALL DIMENSIONS ARE IN MM.

N1	2" T.C. END.	INLET
N2	2" T.C. END.	OUTLET
N3	1/4" BSP THD. (F)	VENT
N4	1/4" BSP THD. (F)	INLET DRAIN
N5	1/4" BSP THD. (F)	OUTLET DRAIN

GOPANI PRODUCTS SYSTEMS AHMEDABAD.

DRG.NO. : MMMBF2007	FILTER HOUSING
CATAGORY : SALES	
DATE : 14/06/07	
SCALE : N.T.S.	SUITABLE FOR : 20" LONG x 7 CART. CODE–7 TYPE